NOTES: UNLESS OTHERWISE SPECIFIED

RevNo	Revision note	Date	Signature	Checked

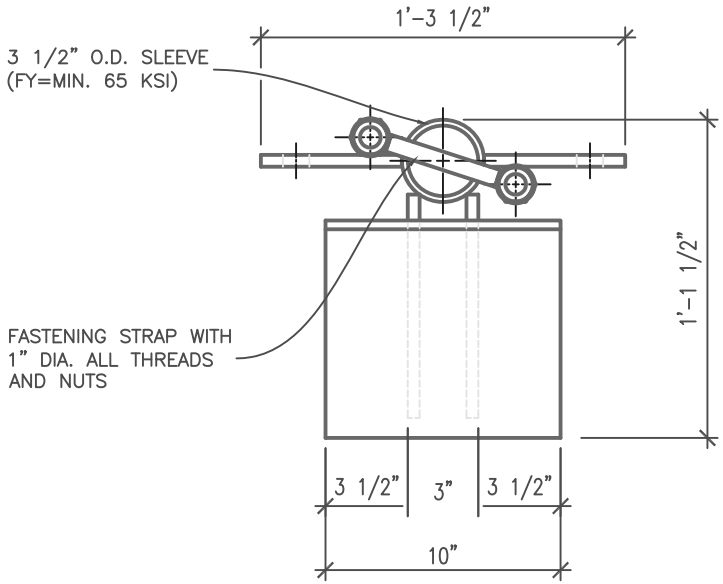

TOP VIEW

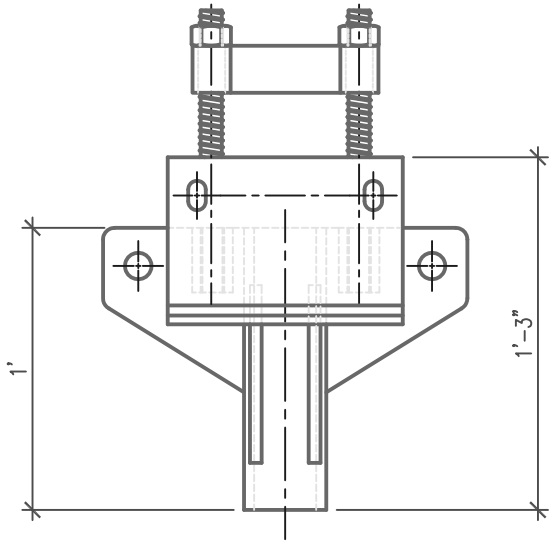

FRONT VIEW

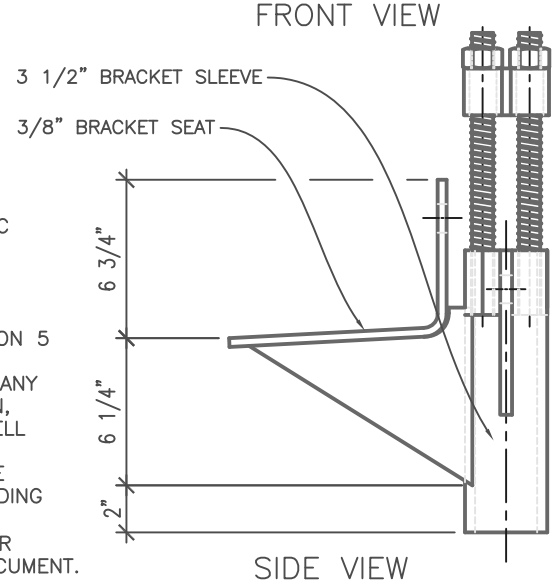

SIDE VIEW

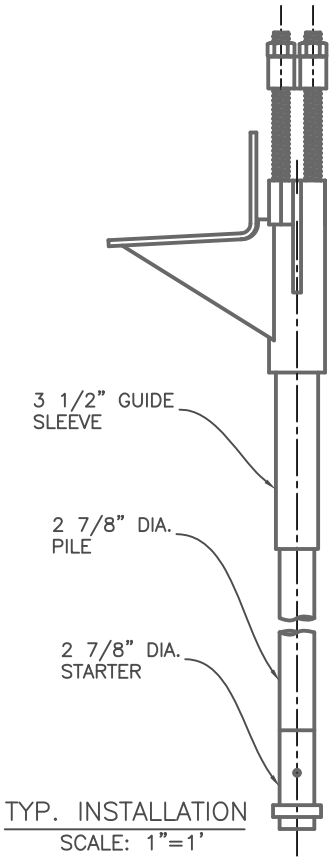

TYP. INSTALLATION
SCALE: 1"=1'

NOTES:

1. POLYETHYLENE COPOLYMER THERMOPLASTIC COATING PER ICC-ES AC 228
3. MANUFACTURER TO HAVE IN EFFECT INDUSTRY RECONIZED WRITTEN QUALITY CONTROL FOR ALL MATERIALS AND MANUFACTURING PROCESSES.
4. ALL WELDING IS TO BE DONE BY WELDERS CERTIFIED UNDER SECTION 5 OF THE AWS CODE D1.1.
5. THE CAPACITY OF THE UNDERPINNING SYSTEM IS A FUNCTION OF MANY INDIVIDUAL ELEMENTS, INCLUDING THE CAPACITY OF THE FOUNDATION, BRACKET, PIER SHAFT, HELICAL PLATE, AND BEARING STRATA, AS WELL AS THE STRENGTH OF THE FOUNDATION BRACKET CONNECTION AND THE QUALITY OF THE INSTALLATION OF THE PILE. YOUR ACHIEVABLE CAPACITY COULD BE HIGHER OR LOWER THAN THOSE LISTED DEPENDING ON THE ABOVE FACTORS.
6. RAM JACK ENGINEERING HANDBOOK FOR ALLOWABLE VALUES AND/OR CONDITIONS OF USE CONCERNING MATERIAL PRESENTED IN THIS DOCUMENT.

THIS DRAWING AND ITS CONTENTS ARE CONFIDENTIAL AND THE EXCLUSIVE PROPERTY OF RAM JACK SYSTEMS DISTRIBUTION, LLC. NO PUBLICATION, DISTRIBUTION OR COPIES MAY BE MADE WITHOUT THE EXPRESSED WRITTEN CONSENT OF RAM JACK SYSTEMS DISTRIBUTION, LLC. ALL RIGHTS RESERVED UNDER COPYRIGHT LAWS.

RAM JACK®
FOUNDATION SOLUTIONS

UNLESS OTHERWISE SPECIFED
* DIMENSIONS ARE IN INCHES
* TOLERANCES: ANGLE ±1°
3 PLACE DECIMALS ± .010
2 PLACE DECIMALS ± .02
* REMOVE ALL BURRS AND SHARP EDGES
* PARENTHETICAL INFO FOR REF ONLY

HOLE TOLERANCES

.013 THRU .125 +.004 −.001	.126 THRU .250 +.004 −.001	.251 THRU .500 +.006 −.001
.501 THRU .750 +.008 −.001	.751 THRU 1.000 +.010 −.001	1.001 THRU 2.000 +.012 −.001

FILE NAME 4038 PILE BKT.	FSCM NO	SHEET 2 OF 7	SCALE 1 1/2"=1'
SIZE A-SIZE TITLE BLOCK		CHARLES T. MARVIN	
DRAWN 10-2-08			
CHECK DARIN WILLIS			
APPR. DARIN WILLIS		4038 DRIVEN PILE BRACKET-STARTER	
ISSUED			
REV		DWG NO 4038-02-07	
CONTRACT NO			